Introduction to DC Power

Telecom and Datacom Applications

v2.0, 2004-09-25

By Johan Sarkinen

A layman's introduction to 24V and -48V power systems with what it's all about.

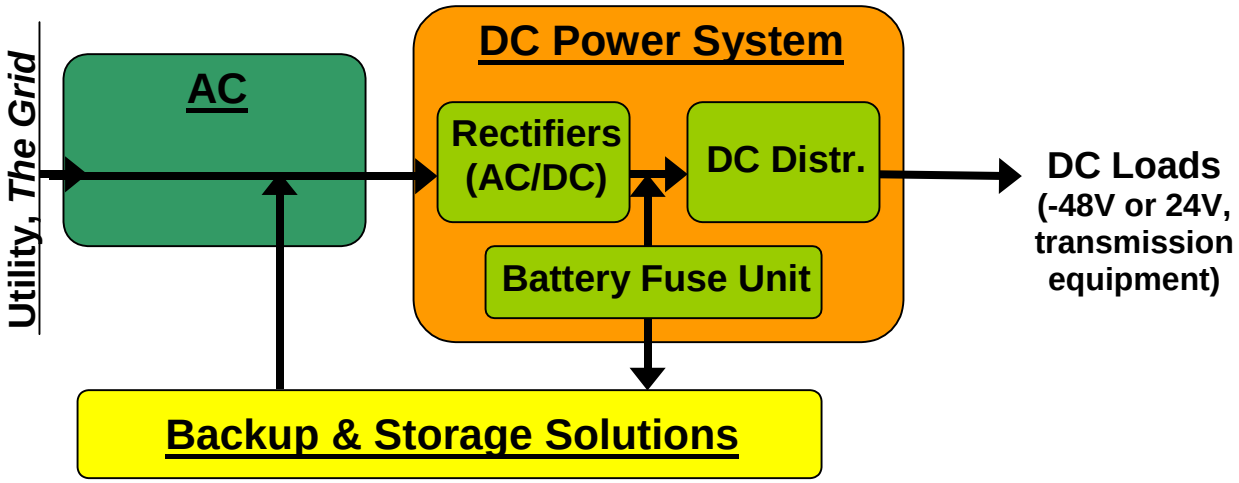

Table of Contents

1 General

This document is a rather brief introduction to *DC Power System* as originated in telecom applications, now increasingly also including data communication networks with the migration of communication technologies.

The purpose is to introduce the more important basic components, key features, and commonly used terminology to the novice reader.

(It does not cover AC vs. DC or anything on history. For such topics one recommendation is "Is It Time to Rethink How We Design and Build a Standby Power System" [1])

1.1 About the Author

Johan Sarkinen was first introduced to telecom DC power solutions at Ericsson – the Swedish telecom equipment manufacturer - in the mid eighties in the beautiful city of Stockholm, Sweden. He has since then on and off been working with telecom- and datacom- power, with primary focus on monitoring and control applications, network management.

Please visit www.sarkinen.com/johan to learn more on Johan – including current contact information. For more on the city of Stockholm: www.stockholmtown.com.

2 Terminology

AC Alternating Current

ATS Automatic Transfer Switch

BDFB Battery Distribution Fuse Bay (probably most common interpretation, variants include e.g. Breaker Distribution Fuse Board/Bay)

CO Central Office

DC Direct Current

HVAC Heating, Ventilation and Air Conditioning

RBS Radio Base Station

UPS Uninterruptible Power Supply

3 Why DC Power Systems

Short answer: Reliability - and thus revenue (for the operator).

"From 3 to 5+ Nines"

Reliability of AC grids in industrialized countries hovers around 99.9%, "*three nines*", [2] [3] and it's not expected to get better in the nearby future[1].

To better exemplify what these different magnitudes of *nines* reliability really mean, review one cost estimate of downtime for a few different types of business (1996, Contingency Planning Research [7]):

Business Operation	Industry	Average Hourly Financial Impact
Airline Reservation Centers	Transportation	$89,500
Brokerage (Retail)	Financial	$6.45 million
Cellular (new) Service Activation	Communication	$41,000
Credit Card Sales Authorization	Financial	$2.6 million
Infomercial 800 Number Promotions	Retail	$199,500
On-Line Network Connect Fees	Service	$25,250
Telephone Ticket Sales	Entertainment	$69,000

The exact numbers aren't of course of particular interest but the magnitude and implications for costs of network downtime:

			Disruption	Cost for Disruption Per Year, with different hourly costs:					
	Reliability		Per Year	$20,000	$50,000	$100,000	$2,600,000	$6,450,000	/hr
Utility, *The*	Two Nines	99%	88 hours	$1,752,000	$4,380,000	$8,760,000	$227,760,000	$565,020,000	
Grid	Three Nines	99.9%	8.8 hours	$175,200	$438,000	$876,000	$22,776,000	$56,502,000	
	Four Nines	99.99%	0.88 hours	$17,520	$43,800	$87,600	$2,277,600	$5,650,200	
DC Power	Five Nines	99.999%	5.3 minutes	$1,752	$4,380	$8,760	$227,760	$565,020	
Systems	Six Nines	99.9999%	32 seconds	$175	$438	$876	$22,776	$56,502	
	Seven Nines	99.99999%	3.2 seconds	$18	$44	$88	$2,278	$5,650	

Example: A brokerage company would statistically encounter a financial impact of $56 million per year if relying directly on the grid with 99.9% uptime, to compare with $565 thousand with five nines reliability.

And if the immediate financial impact isn't enough, only 6 percent of companies suffering from a catastrophic data loss survive, while 43 percent never reopen and 51 percent close within two years. Source: University of Texas ([7])

The case for using DC power instead of AC power is strongly argued in the "Powering the Internet" paper, compiled in 1998 by eighteen co-authors from all around the World, manufacturers, operators, consultants. [8]

[1] It's probably more likely it will get worse before it gets better – the increasing demand for power w/o expansion and insufficient maintenance further stresses already vulnerable distribution networks. [4][5][6]

4 Components of a DC Power System

In its simplest form a *DC Power System* consists of rectifier(s) – converting AC to DC, most often including batteries as backup.

The figure below shows many more parts and their positions in the system. Which ones actually used in a particular installation depend on size of system, availability of incoming AC, requirements on reliability, what loads to feed and so on.

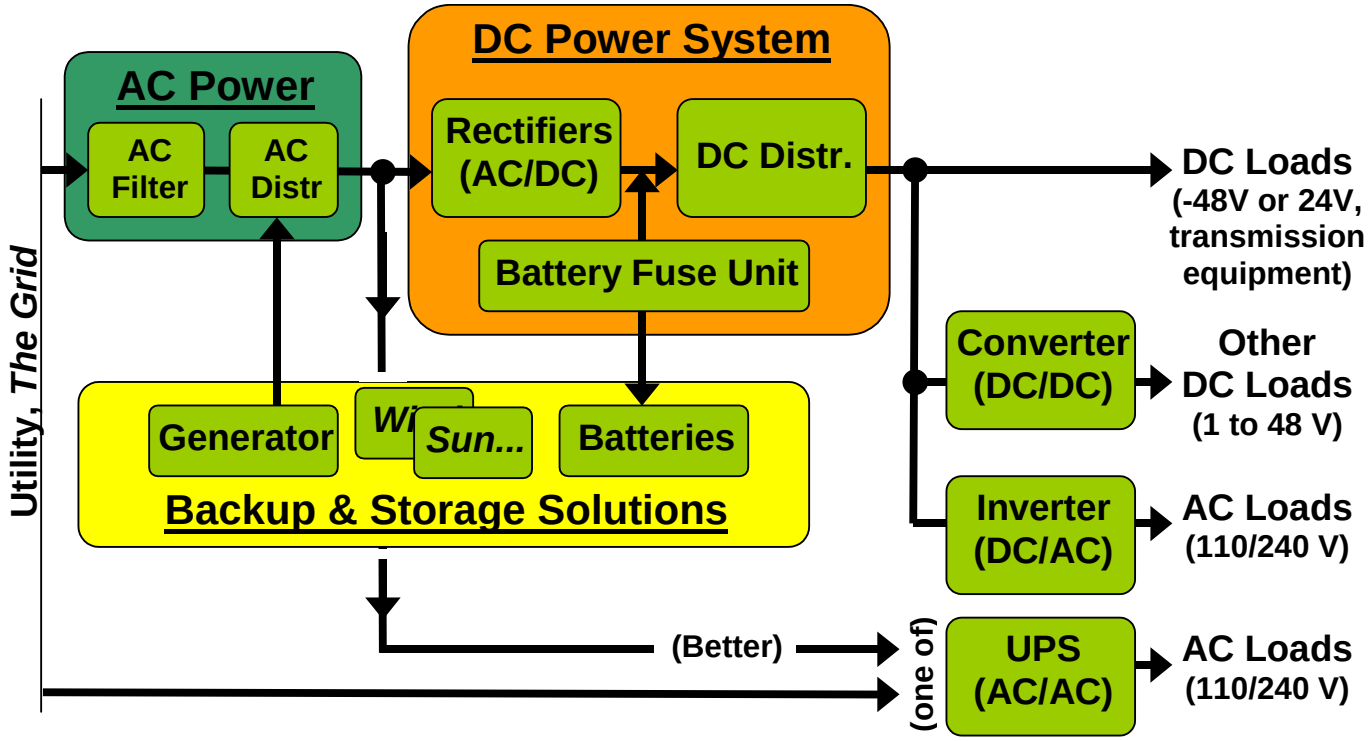

- AC Power System
  - AC Filter, cleans up incoming AC, protection against spikes etc
  - AC Distribution, Automatic Transfer Switch (ATS)
  - Generator, Standby Engine, GenSet (as in Generator Set)
  - Inverter, converts reliable DC power to feeding AC loads
  - Uninterruptible Power Supply (UPS)

- DC Power System
  - Rectifiers
  - Distributions, Breaker Distribution Fuse Board (BDFB)
  - Batteries
  - Converters, converting DC to other voltage levels when required due to loads

-48V is the norm for switch power, Central Office equipment, and 24V is norm for 2G Radio Base Station (RBS) sites, cellular networks. For 3G cellular networks, -48V has been discussed also for RBS.

5 More to Consider

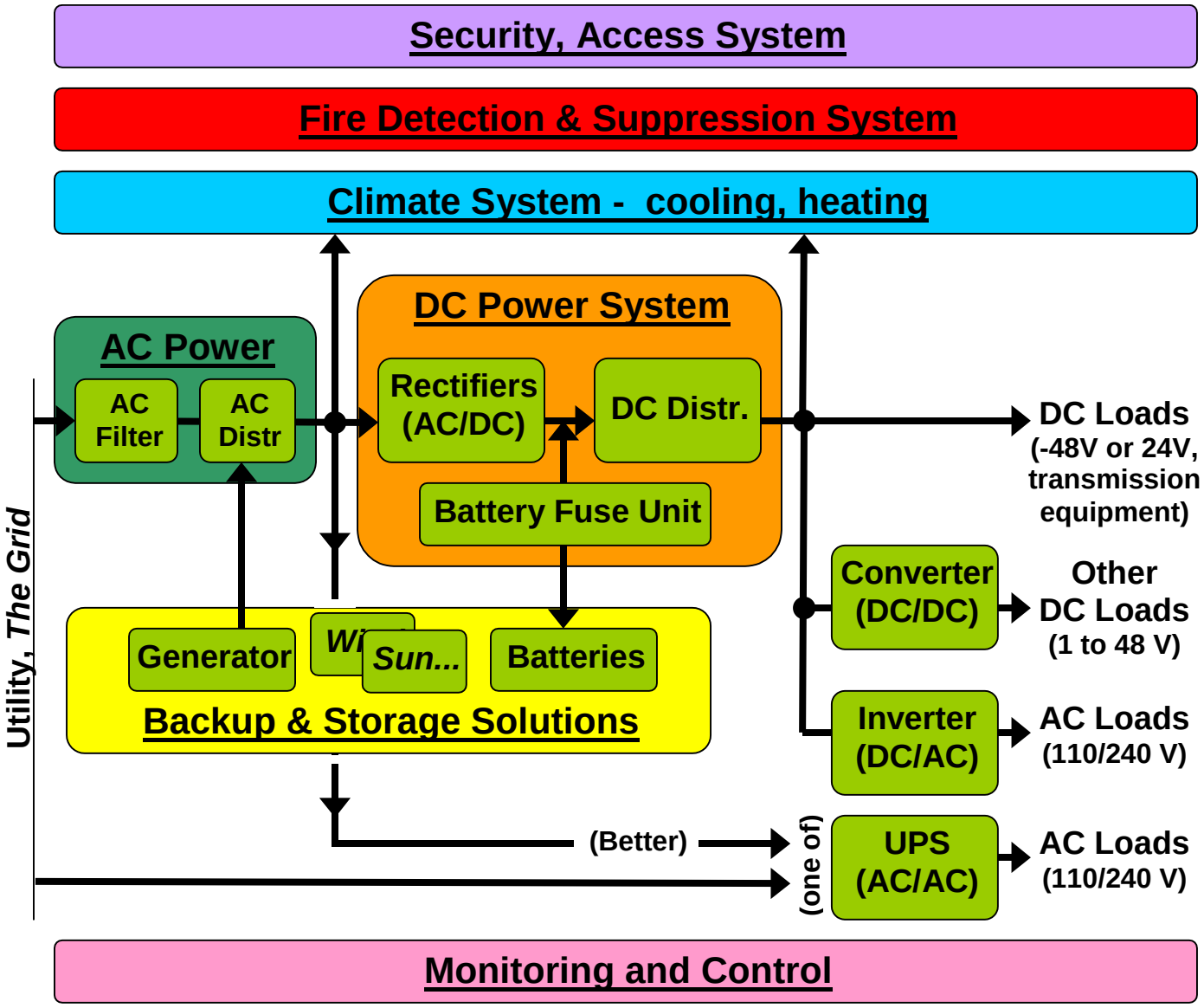

Monitoring and Control of all parts is crucial for high reliability and availability, as well for performing periodic maintenance operations.

Other important systems include e.g.:

- Security, Access, including intrusion detection
- Fire Detection & Suppression
- Climate

→ Keep in mind how such systems are powered – from an unreliable or reliable power source.

No chain is stronger than its weakest link…

6 References & Further Reading

[1] "Is It Time to Rethink How We Design and Build a Standby Power System", George A. Pedersen, Intelec 2004

[2] "Grid Reliability and Power Quality Solutions for the Digital Economy with the Virtual Power Plant", Scott A. Castelaz, The Utilities Project Volume 1, November 15, 2000, www.utilitiesproject.com

[3] "Back to the Future", John M. Hawkins, Intelec 2004

[4] "Grid of the Future White Paper on Interconnection and Controls for Reliable, Large Scale Integration of Distributed Energy Resources", Vikram Budhraja, Carlos Martinez, Jim Dyer, and Mohan Kundragunta, Consortium for Electric Reliability Technology Solutions (CERTS), December, 1999

[5] "Lessons from the August 2003 Blackout", Union of Concerned Scientists, Page Last Revised: 09.15.2003, www.ucsusa.org/clean_energy/renewable_energy/page.cfm?pageID=1248

[6] "Experts' Papers Offer Recommendations to Improve Reliability of Nation's Transmission Grid", press release Jan 30, 2004, www.dezignare.com/whatshot/2004january/30.Lexington.html

[7] "1996 Cost of Downtime Study", Contingency Planning Research (CPR), including material from University of Texas

[8] "Powering the Internet Datacom Equipment in Telecom Facilities: The Need for a DC Powering Option", Technical Subgroup on Telecommunications Energy Systems of the Power Electronics Society of the Institute of Electrical and Electronics Engineers, Inc. 1998